**SD - Series**
**Manual Changeover Manifold for High Pressure Cylinders (up to 3,000 psi.) in Industrial Applications**

The SD - series manifold systems are cleaned, tested and prepared for the indicated gas service and are built in accordance with the National Fire Protection Association and Compressed Gas Association guidelines. The manifold consists of a regulator and header, to provide an increased supply of gas for the specific gas application. Pressure gauges show system status and alert the need to replace depleted cylinders. Features of the manifold system include a regulator, 24" flexible pigtails with check valves and complete mounting hardware

The SD - series manifold should be installed in accordance with guidelines stated by the National Fire Protection Association, the Compressed Gas Association, the Occupational Safety and Health Administration, Canadian Standards Association, and all applicable local codes. The carbon dioxide and nitrous oxide manifolds should not be placed in a location where the temperature will exceed 120° F (49° C) or fall below 20° F (-7° C). The manifold for all other gases should not be placed in a location where the temperature will exceed 120° F (49° C) or fall below -20° F (-29° C). A manifold placed in an open location should be protected against weather conditions. During winter, protect the manifold from ice and snow. In summer, shade the manifold and cylinders from continuous exposure to direct rays of the sun.

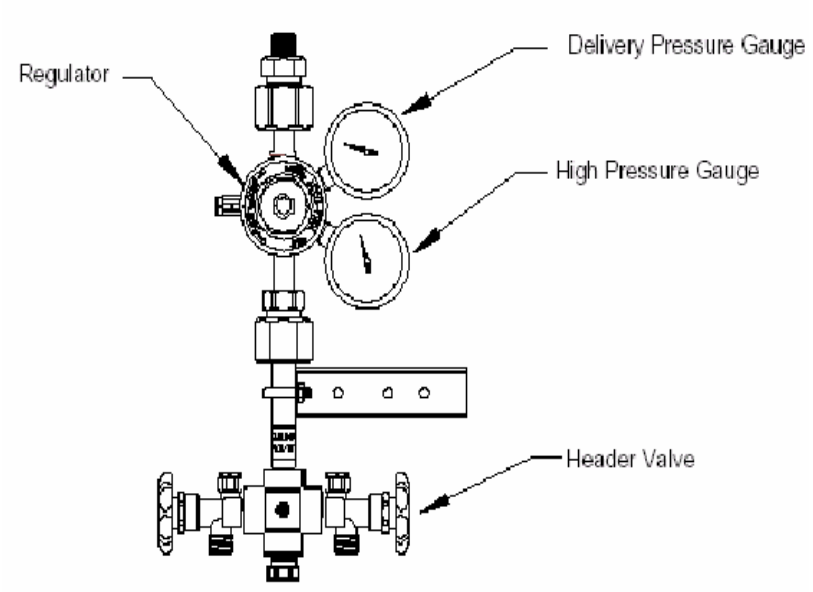


**MANIFOLD OPERATION**
The manifold includes the following components and features: regulator, 24" flexible stainless pigtails with check valves, and a header. The manifold is designed to use a line regulator (optional item) which can be mounted on the manifold outlet for delivery pressures less than 20 psig. Gas flows through the manifold to the primary regulator and then through the line regulator (if installed). Final delivery pressure is controlled by either the line regulator or by the primary regulator should the application not require a line regulator. A line regulator is not provided with the manifold. As cylinders deplete the high pressure gauge on the regulator along with any alarm systems installed will indicate that the bank of cylinders should be changed. After replacing empty cylinders, the manifold is immediately ready for service.

**Specifications**
- Model RM regulator included for most gas service. Note: RDM series used for Oxygen. (adjustable delivery pressure 20-160 psig, Acetylene 0-15 psig, LPG 0-45 psig) Optional regulators are available upon request for higher delivery pressures.
- Model RS-300-MAN (40-300 psig) regulator included for SDHP series manifolds.
- Manifold outlet: 1/2" NPT male
- 24" Flexible stainless steel braided Teflon™ lined pigtails with check valves (EPDM seat all gases, Argon/Methane mixtures use Viton). Check valve is a header end of pigtail for all gases *except* Oxygen. Note: Helium and Hydrogen manifolds shipped with synthetic fiber braided pigtails.
- Maximum working Pressure: 3,000 psig
- Optional safety kits, flash arrestor and relief valve, available for fuel gases
- Accessory heater kits available for Carbon Dioxide and Nitrous Oxide manifolds
- Complete wall mounting hardware and operating instructions

**SD - Series**
**Manual Changeover Manifold for High Pressure Cylinders (up to 3,000 psi.) in Industrial Applications**

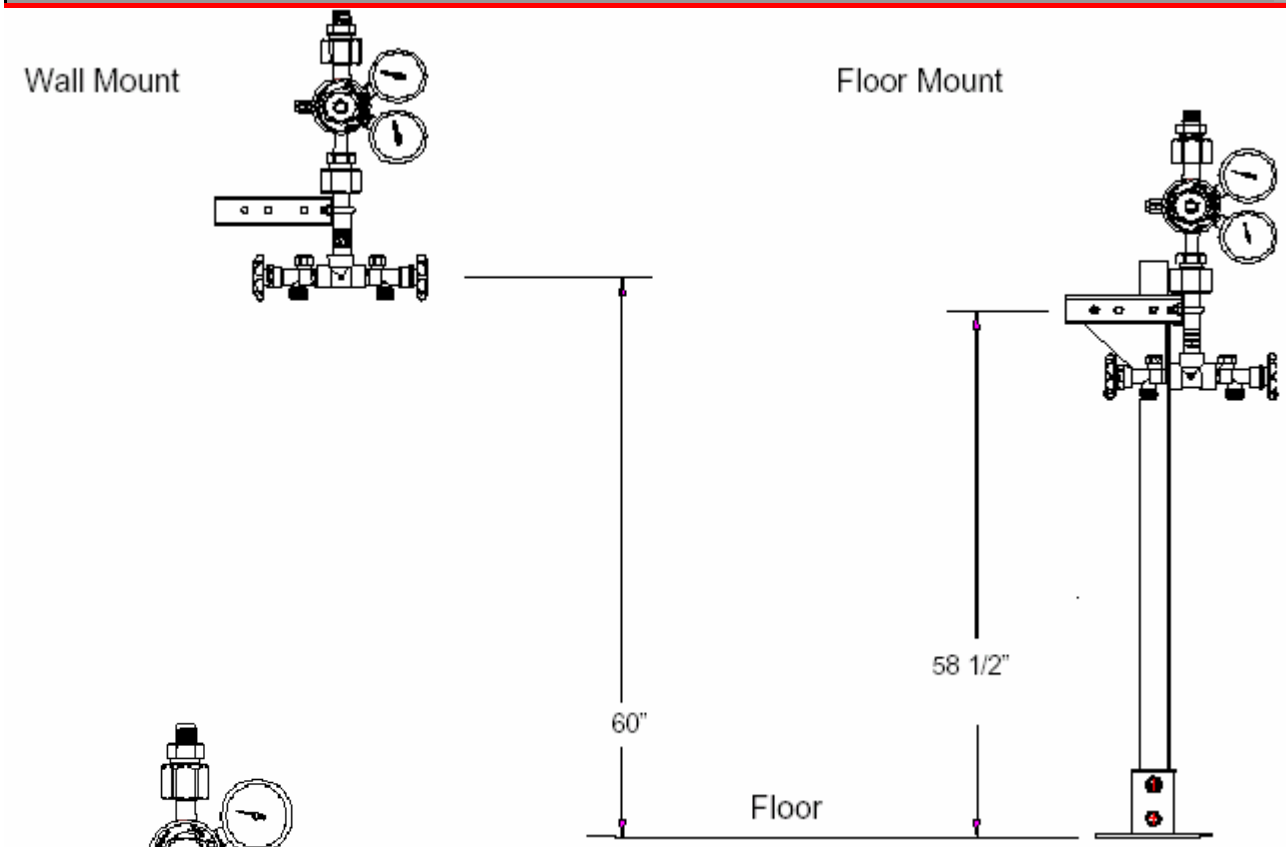


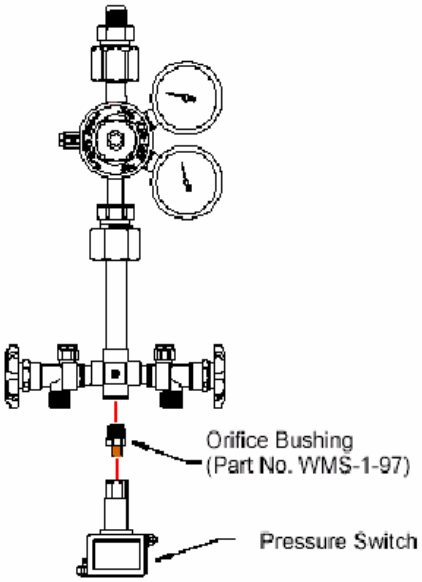


**Alarm Option**
An alarm can be added to signal changeover from service to reserve banks by ordering the following items; WMS-1-97 orifice adaptor, WME-4-9 pressure switch, WMS-9-25C power supply box and BIA-3 remote audio/ visual alarm panel.

***How to Order***: Specify; Control type (X) - Service (Y) - Mounting (Z)

| Control Type (X) | Gas Service (Y) | | Mounting |
|---|---|---|---|
| SD | (1) Acetylene | CGA-510 | |
| Most gases: 20 - 160psig | (1A) Acetylene | CGA-300 | |
| Acetylene: 0 - 15 psig | (2) Air | CGA-346 | BLANK = Wall Mount |
| LPG: 0 - 45 psig | (3) Argon | CGA-580 | (standard) |
| | (4) Carbon Dioxide | CGA-320 | |
| SDHP | (5) Helium | CGA-580 | |
| (only for non-fuel gas | (6) Hydrogen | CGA-350 | F = Flood Mount |
| service): 40 - 300 psig | (6A) Argon/Methane | CGA-350 | (floor stand included) |
| | (7) Nitrogen | CGA-580 | |
| | (7A) Industrial Air | CGA-590 | |
| | (8) Nitrous Oxide | CGA-326 | |
| | (9) Oxygen | CGA-540 | |
| | (10) LPG | CGA-510 | |